ENGINE, COOLING - Z26S4D92AN/AH/BN/BH (C750298)

2026 RZR - RZR PRO S4 ULTIMATE (R01) - Z26S4D92AN/AH/BN/BH

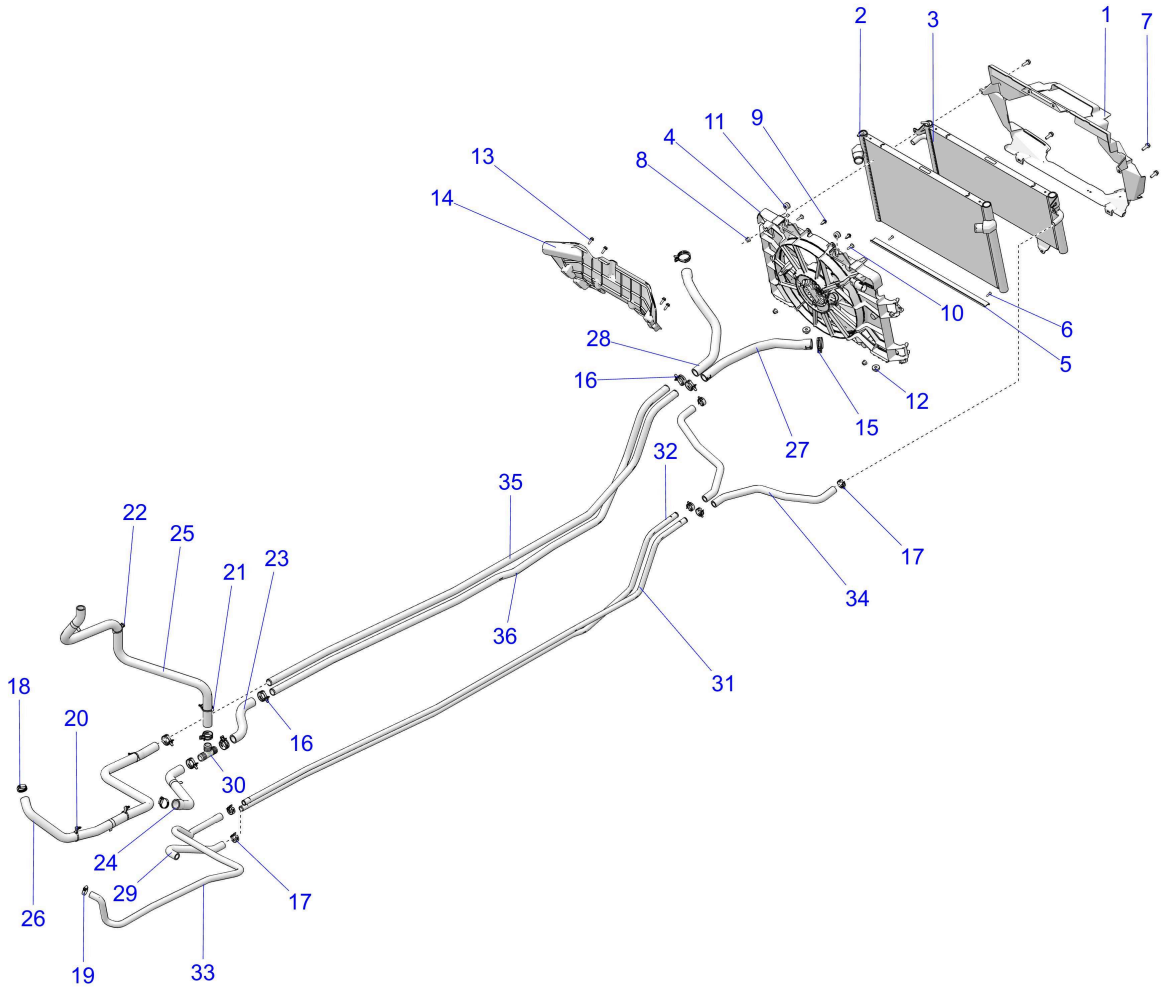

© 2023 Polaris Industries Inc.

C750298

Reference #	*Part#*	*Description*	*Quantity*
1	5465017	SHROUD-RADIATOR,RZR,74	1
2	1241322	ASM-RADIATOR,CORE	1
3	1241528	ASM-RADIATOR,CORE,LT	1
4	2417225	FAN-ASSEMBLY	1
5	5270074	BRKT-SUPPORT,RADIATOR	1
6	7512026	SCREW-#10X3/4-HI/LO-PN-T25,TRX-M	2
7	7518514	BOLT-M8X1.25X25,HXFLG-OLIVE D	4
8	7547332	NUT- M8X1.25, FLG, NYLOC-OLIVE D	4
9	7661855	RIVET-TUFLOK,.315-.325X.787	2
10	7519650	SCR-TXTH-M6X1.0X25 ZFB	2
11	5416503	ASM-GROMMET & INSERT	2
12	7052028	GROMMET-FLANGED,.36X.56X1.06	2
13	7518529	SCR-M6X1.0X20,HXHD,FLG,TDFM,BK	4
14	5465143	PANEL-AIR,DEFLECTOR,74	1
15	7082625	CLAMP-CTB42	2
16	7082308	SPRINGBAND-CLAMP,BLK	7
17	7080841	SPRINGBAND-CLAMP 27/12,GREEN	6
18	7081192	CLAMP-HOSE(WORM DR)25-40MM	2

19	7081415	CLAMP-CONSTANT TENSION,16-27	1
20	7082406	CLIP-FIR TREE,12.5MM OFF,90DEG	2
21	7081496	CLIP FIR-TREE,DIA6-33MM	2
22	7081808	CLIP-EDGE,1-3MM,6-45MM,SERT.	1
23	5416570	HOSE-ENG IN,TUBE/T	1
24	5416571	HOSE-ENG IN,T/ENG	1
25	5416572	HOSE-OUT,ENGINE,SURGE/T	1
26	5416573	HOSE-ENGINE OUT	1
27	5417552	HOSE-RADIATOR,HT,IN	1
28	5417553	HOSE-RADIATOR,HT,OUT	1
29	5416576	HOSE-PUMP,IN,TUBE/T	1
30	7052373	CONNECTOR-TEE,1",1",1" BARBED	1
31	5143750	TUBE-COOLANT,LT UPPER,MP	1
32	5143751	TUBE-COOLANT,LT LOWER,MP	1
33	5417198	HOSE-LCAC,OUT	1
34	5417555	HOSE-RADIATOR,LT	2
35	5143748	TUBE-COOLANT,HT UPPER,MP	1
36	5143749	TUBE-COOLANT,HT LOWER,MP	1

Copyright 1996-2026 Polaris Industries U.S.A All rights reserved.